UV-Ozone Stripper/Cleaner

UV-1

FEATURES

- Utilizes a unique combination of ultraviolet light, ozone and controlled heating to etch organic materials
- Accommodates a variety of substrate shapes and sizes up to 6 inches in diameter
- Compact, uses minimum benchtop space
- Heated sample stage increases cleaning/stripping rates
- Broad process temperature range
- "Soft", completely dry process will not cause electrical damage to circuits
- Operates at atmospheric pressure – no vacuum system required
- Automatic nitrogen purging system purges cleaning chamber after every run
- Door interlock system guarantees system is inoperable when lid is open
- Optional ozone catalyst unit for reducing ozone concentration in the exhaust to a safe level

APPLICATIONS

- Removing organic contamination
- Pre-cleaning wafers prior to deposition (e.g. GaAs prior to MBE, sapphire prior to HgCdTe)
- Descumming photoresist and polyimide
- Modifying surfaces for better adhesion
- Final cleaning before wafer bonding
- UV curing
- Growth of thin stable oxide films (Ge, Si)
- Cleaning of AFM tips

SAMCO's UV-1™ is a compact, benchtop, UV-ozone cleaning system that will not damage delicate electronic devices. This easy to operate system uses a unique combination of ultraviolet radiation, ozone, and heat to gently, yet effectively, remove organic materials from a variety of substrates, including: silicon, gallium arsenide, sapphire, metals, ceramics, quartz and glass. The versatile UV-1 is well-suited for a variety of applications such as substrate cleaning, photoresist descumming, improving wettability, and UV curing. By operating at atmospheric pressure, the UV-1 eliminates the need for a cumbersome, high-maintenance, vacuum system.

SPECIFICATIONS

SUBSTRATE SIZE	■ Up to 150 mm diameter (heated aluminum sample stage is 200 mm in diameter)
MAXIMUM SAMPLE THICKNESS	■ 17 mm, between sample stage and lamp
UV LIGHT SOURCE	■ Hot cathode, low-pressure mercury vapor lamp ■ Process active wavelengths: ~85% 254 nm, ~15% 185 nm
OZONE GENERATOR	■ Silent discharge, at least 5 g/m^3 at 0.5 liter/min. oxgyen flow rate
UV-LAMP, OZONE GENERATOR SWITCHES	■ Allows the UV-lamp and ozone generator to be switched ON or OFF during the process
SUBSTRATE HEATER	■ Ambient to 300°C
TIMER	■ Digital, 99.9 hours, minutes, or seconds
OZONE KILLER	■ Common metal honeycomb type ozone scrubber to remove residual ozone in the process gas exhaust stream. Concentration of ozone at the exhaust is less than 0.1 PPM
UTILITIES REQUIREMENTS	*Power Required:* ■ 115 VAC, 1 KVA *Oxygen:* ■ Extra dry grade, 0.1 MPa (14.2 psig), 0-1 liter/min. *Nitrogen Purge Gas:* ■ Extra dry grade, 0.05 MPa (7.1 psig), 3 liters/min. *Exhaust:* ■ Safe exhaust for process gas effluent
OPTIONS	■ Higher concentration ozone generator ■ Increased gap between sample stage and lamp (up to 25 mm) ■ UV lamp replacement kit ■ Oxygen and Nitrogen Filters

DIMENSIONS

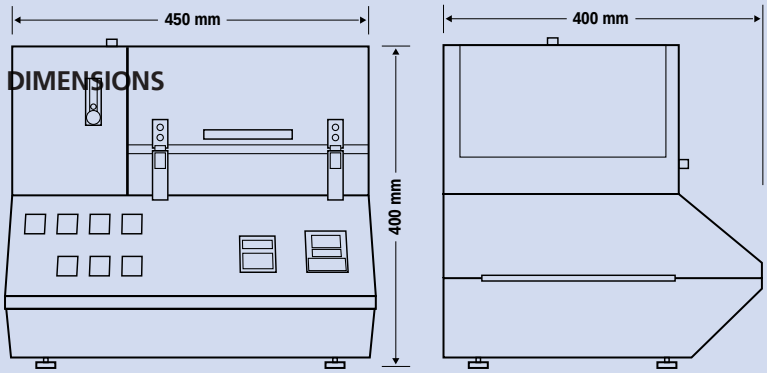

SCHEMATIC

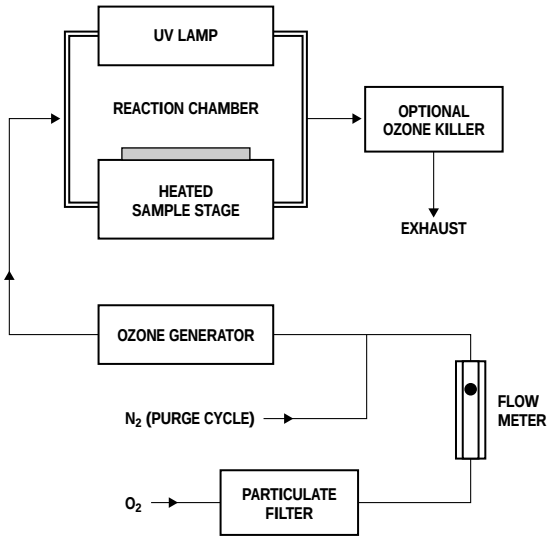

PROCESS DESCRIPTION

Dry, particulate-free oxygen is fed into a silent-discharge ozone generator. This internally generated ozone then flows into the cleaning chamber which contains a UV lamp and a heated sample stage. The spiral shape of the UV lamp and circular location of the ozone gas nozzles provide uniform UV irradiation and distribution of ozone across the substrate surface.

Ozone decomposes into oxygen molecules and atomic oxygen when exposed to long wavelength (200-300 nm) UV radiation. Simultaneously, organic materials such as photoresist, solvent residues, human skin oil and pump oil are excited or dissociated by the long wavelength UV radiation. The atomic oxygen is highly reactive and oxidizes the excited organic molecules to form simpler, harmless products such as carbon dioxide, water or nitrogen. This process cleans or removes organic contaminants from the substrate.

Specifications subject to change without notice.

CORPORATE HEADQUARTERS:
36, Waraya-cho, Takeda
Fushimi-ku, Kyoto 612-8443 JAPAN
Phone: (075) 621-7841
FAX: (075) 621-0936
E-mail: itl@samco.co.jp
URL: www.samco.co.jp

UNITED STATES OFFICE:
532 Weddell Drive, Suite 5
Sunnyvale, California 94089
Phone: (408) 734-0459
FAX: (408) 734-0961
E-mail: info@samcointl.com
URL: www.samcointl.com